ARCHITECTURAL/MECHANICAL PRODUCT SPECIFICATIONS

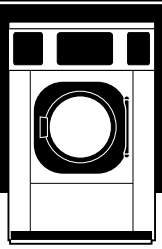

MG055

VENDED MG-SERIES 55-POUND CAPACITY HARD-MOUNT WASHER-EXTRACTOR

CONTINENTAL GIRBAU®

2500 State Road 44 • Oshkosh, WI 54904
920.231.8222 • FAX 920.231.4666
www.continentalgirbau.com

Capacity *lbs (kg)*	55 *(24)*
Cylinder Diameter *inch (mm)*	27.6 *(700)*
Cylinder Depth *inch (mm)*	23.1 *(586)*
Cylinder Volume *cu ft (dm³)*	8 *(226)*
Net Weight *lbs (kg)*	802 *(364)*
Crated Weight *lbs (kg)*	869 *(394)*
Machine Width *inch (mm)*	34.2 *(868)*
Machine Depth *inch (mm)*	43.2 *(1098)*
Machine Height *inch (mm)*	55.3 *(1404)*
Door Opening *inch (mm)*	16.8 *(426)*
Floor to Door *inch (mm)*	20.3 *(515)*
Shipping Dimensions *inch (mm) (WxDxH)*	35.3 x 45.4 x 61.6 *(897 x 1153 x 1565)*
Washing Speed *rpm*	43.6
Spin Speeds *rpm*	43.6/100/300/400/600/715
G-force	0.75/4/35/63/141/200
Static Force Transmitted *lbs (kg)*	1052 *(477)*
Dynamic Force Transmitted *lbs (kg)*	2487 *(1128)*
Available Voltage	208-240/60/1
Wire Conductor/Amp	2W + G, 6 Amp
Drain Diameter *inch (mm)*	3 *(76)*
Water Inlets *inch (mm)*	3/4 *(19)*
Recommended Water Pressure *PSI (bar)*	30-60 *(2-4)*
Water Flow *gal/min (l/min)*	16 *(60)*
Motor Power *kW*	1.05
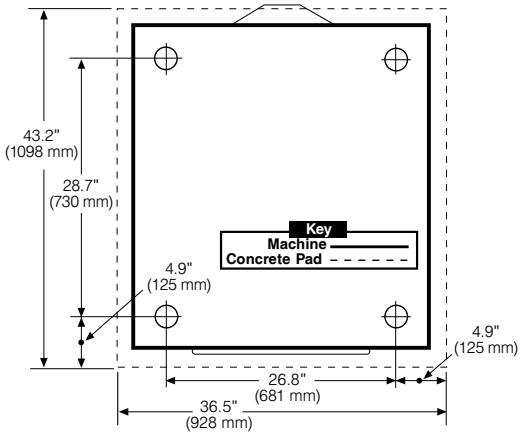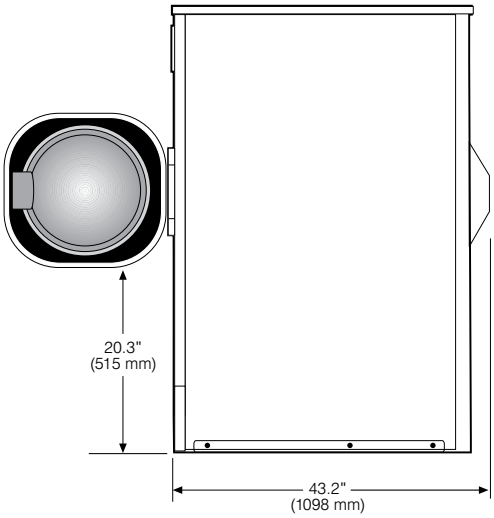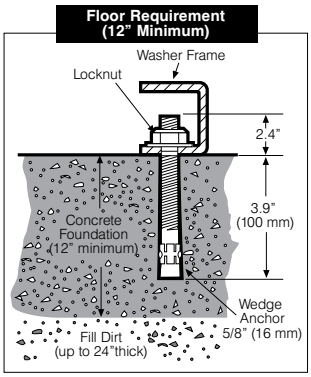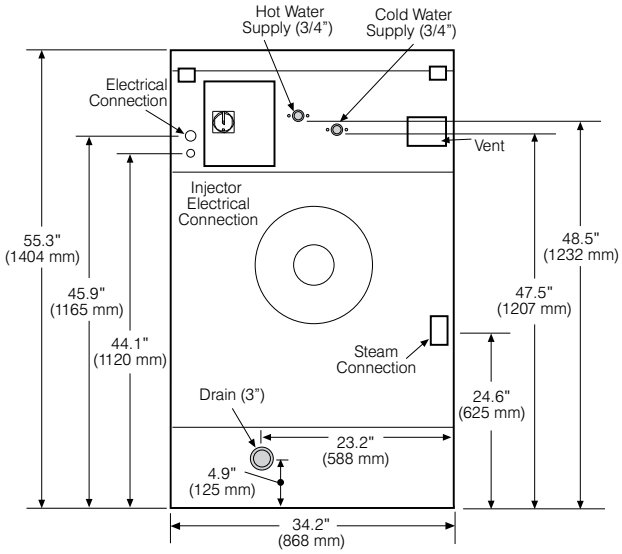
* Specifications subject to change without notice or obligation. Call Continental Girbau, Inc for dimensions not shown or for clarification.